Product Specification

Datasheet



AV-ZH SERIES

Product Version：V1.0

Date：20250527

Declaration

Welcome to choose the products of Shenzhen Asia Vision Technology Co., Ltd. To better and more quickly understand the products, please read this specification carefully before using our company's products. If this document helps and facilitates your understanding and use of the products, we are very pleased. When compiling this document, we strive for accuracy and reliability. Content may be modified or changed at any time without prior notice. If you encounter any problems during use or have any suggestions, please contact us according to the contact information provided in the document. We will do our best to provide support for the problems you encounter during use.

Content

1. Product Description 3

2. Module Specification 3

3. Cabinet Specification 4

4. Module Dimension Structure 4

5. Module Picture 4

6. Cabinet Dimension Structure 5

7. Cabinet Picture 6

8. Technical Parameter 7

9. Connecting Diagram 9

10. Packing and After-sale Service 9

oduct Description

This product is based on COB surface encapsulation technology for outdoor rental scenarios, using die-cast aluminum backshell to ensure the flatness of the display surface, combined with the company's proprietary sealing technology to effectively solve the pain point in leasing scenarios that SMD lamp beads easy to knock out of , the technology effectively improves the reliability of the LED display screen, the luminous light color and the protective performance.

1.1 Application Scope

This technical specification is only applicable to outdoor COB ZH series product.Module size:250mm*250mm and its supporting die cast aluminum cabinet:500mm*500mm/500mm*1000mm.

1.2 Product Features

- 500mm*500mm*94mm/500mm*1000mm*94mm die-casting aluminum cabinet;
- Optional pitch: ZH2.604, ZH1.953;
- Panel can be left and right splicing arc ± 7.5 °, easy to splice different shapes;
- Integrated windproof bracket system, wind load can withstand wind speed of 20m/s;
- Modular design improves the maintenance efficiency, and parts can be easily replaced;
- Unique COB sealing technology, surface gel thickness ≥ 600um, hardness of 80D or more, anti-knock ability is 3 times higher than conventional SMD products;
- Full flip-chip process, supporting optional common cathode program, low heat generation, low light decay, excellent heat dissipation, low consumption and energy saving;
- High brush low gray, refresh frequency up to 7680Hz, gray level 15Bit;
- Waterproof, dustproof, anti-oxidation, anti-static, anti-impact, good stability, prolong service life.

2. Module Specification

Item	Specification	Module Picture
Series	ZH Series COB Module	
Material	Die-cast aluminum	
Pixel Pitch	1.95mm, 2.6mm	
Resolution	128*128, 96*96(W*H)dot	
Module Size	250 *250(W * H)mm	
Module Weight	860g±10g	

0mm*500mm Cabinet Specification

Item	Specification	Module Picture
Series	ZH Series Cabinet	
Material	Die-cast aluminum	
Pixel Pitch	1.95mm, 2.6mm	
Resolution	256*256,192*192(W*H)dot	
Cabinet Size	500*500*94(W*H*D)mm	
Cabinet Weight	8Kg	

3. 500mm*1000mm Cabinet Specification

Item	Specification	Cabinet Picture
Series	ZH Series Cabinet	
Material	Die-casting aluminum	
Pixel Pitch	1.95mm, 2.6mm	
Resolution	256*512,192*384(W*H)dot	
Cabinet Size	500*1000*94(W*H*D)mm	
Cabinet Weight	13Kg	

4. Module Dimension Structure

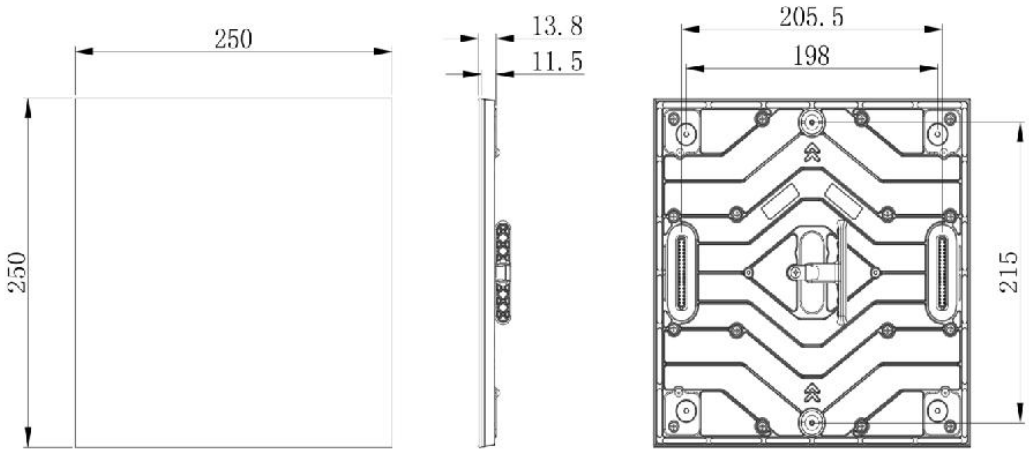

5. Module Picture

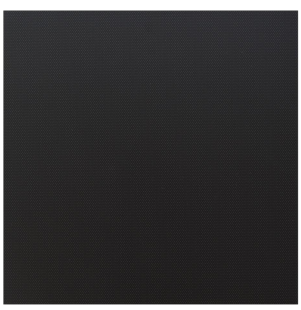

Front View



Back View

abinet Dimension Structure

6.1 500mm*500mm Cabinet Dimension Structure

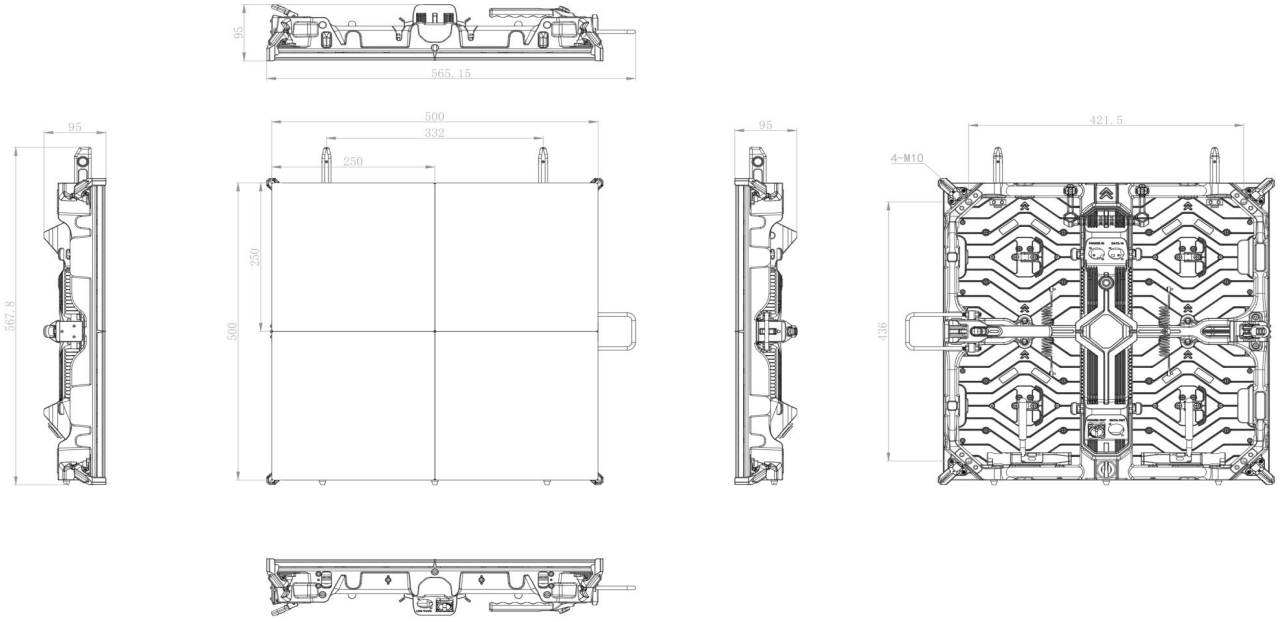

6.2 500mm*1000mm Cabinet Dimension Structure

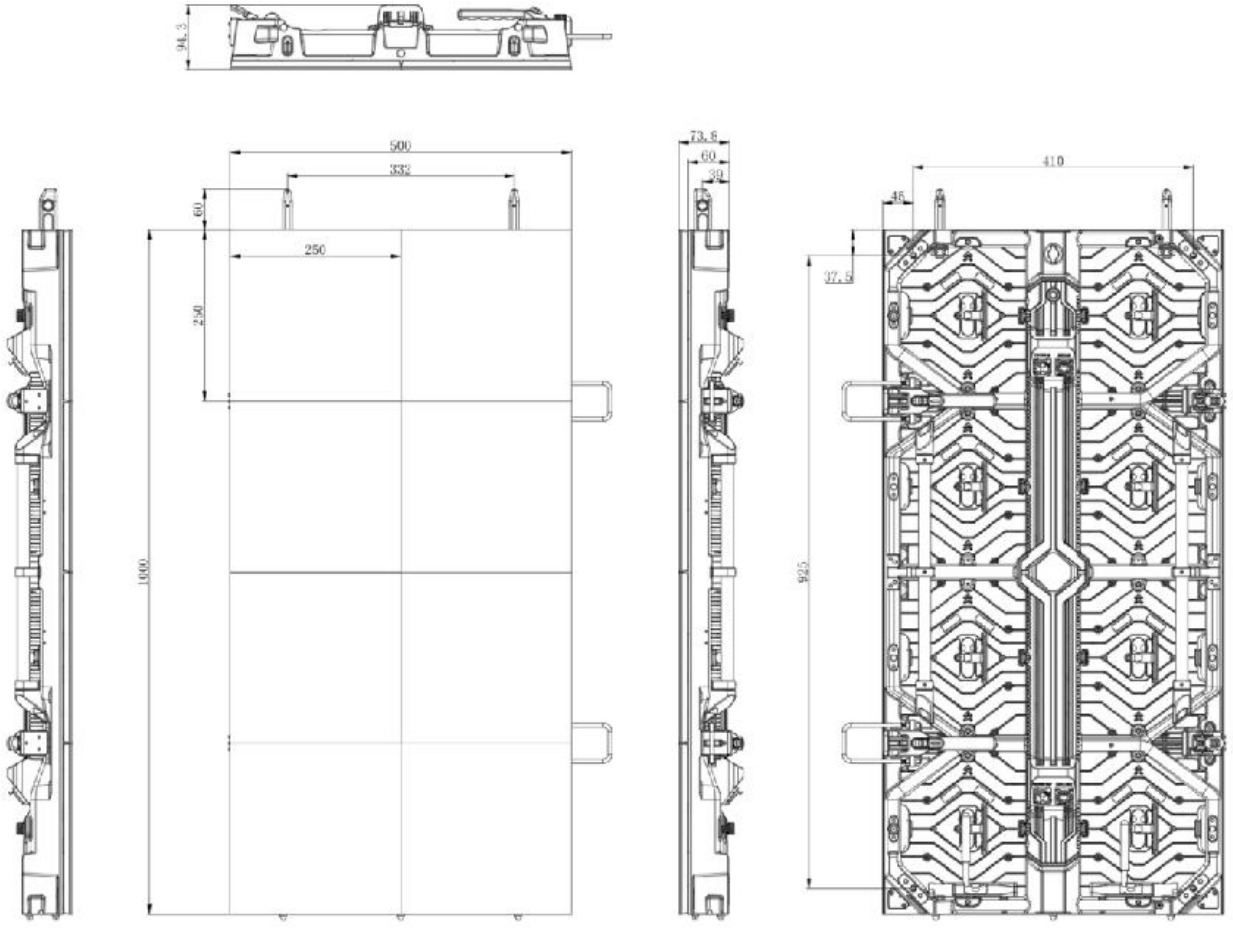

abinet Picture

7.1 500mm*500mm Cabinet Picture





7.2 500mm*1000mm Cabinet Picture



Front View



Back View

echnical Parameter

Item	Specification	ZH1.95	ZH2.6	ZH-PRO2.6
Module Parameter	**Pixel Pitch (mm)**	1.95	2.6	2.6
	Pixel Structure	COB 1R1G1B Flip Chip		COB 1R1G1B Flip Chip
	Pixel Density(dot//m²)	262144	147456	147456
	Module Size(WxH)(mm)	250*250	250*250	250*250
	Backshell Material	Die-cast aluminum	Die-cast aluminum	Die-cast aluminum
	Module Resolution(W*H)(dot)	128*128	96*96	96*96
	Maximum Current(A）	9	9	9
	Supply Voltage(V)	DC4.2/3.2	DC4.2/3.2	DC4.2/3.2
	Scanning Method	1/16	1/8	1/8
	Refresh Frequency(Hz)	≥7680		≥7680
	Illumination(cd//m²)	⩾3000		⩾4000
	Driver IC	Constant Current Drive		Constant Current Drive
	Contrast Ratio	≥10000:1		≥10000:1
Cabinet Parameter	**Cabinet Size(W*H*D)**	500*500*94/500*1000*94		500*500*94/500*1000*94
	Cabinet Material	Die Casting Aluminum		Die Casting Aluminum
	Cabinet Weight(kg)	8/13		8/13
	Enclosure Connection Method	Quick Lock		Quick Lock
	Installation/Maintenance Methods	Front or back Installation/Maintenance		Front or back Installation/Maintenance
	Color Temperature /Luminance Uniformity	3200-12000K Adjustable; ≥98%		3200-12000K Adjustable; ≥98%
	Chromatic Uniformity	± 0.003Cx, Cy		± 0.003Cx, Cy
	Horizontal/Vertical View	≥170°/≥140°		≥170°/≥140°
	Single-point Color Correction	Yes		Yes
	Single Point Brightness Correction	Yes		Yes
	Standard Receiver Card	A8S-N		A8S-N
	Frame Rate(Hz)	50/60		50/60
	Protection Level	IP64		IP64
	Signal Interface Mode	RJ45		RJ45
	Power Interface Method	Connector		Connector
	Input Voltage Range AC(V)	100-240		100-240
	Peak Power Consumption(W/m²)	≤680		≤680
	Average Power Consumption(W//m²)	≤310		≤310
	Working Temperature and Humidity Range	-20℃～+50℃,10%～95%RH		-20℃～+50℃,10%～95%RH
	Storage Temperature and Humidity Range	-40～+70℃,10%～95%RH		-40～+70℃,10%～95%RH
	Service Life(H)	≥100000		≥100000
	Mean Time Between Failure(H)	≥10000		≥10000

8.1 Package Comparison

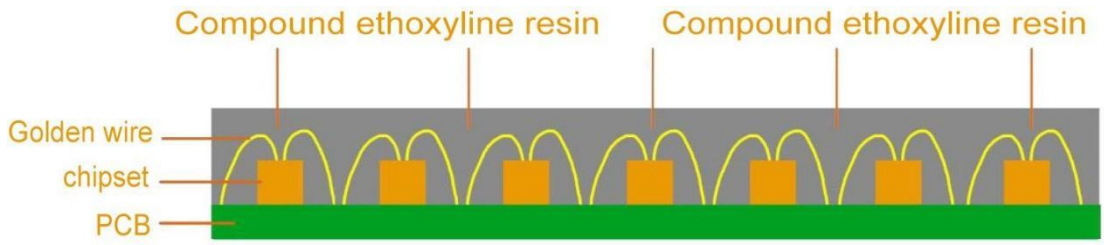

COB （regular technology)

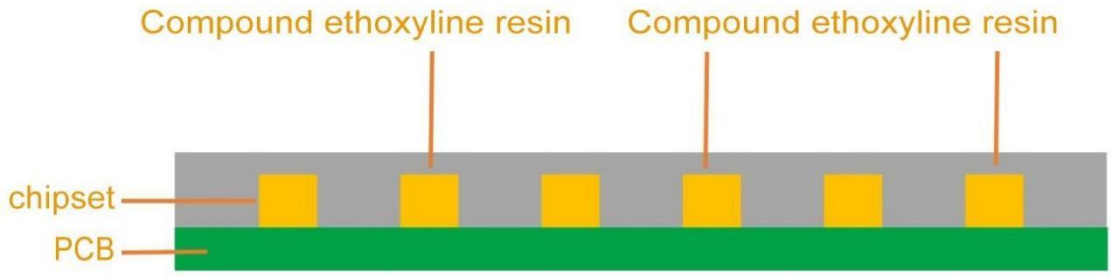

Flip Chip COB（Customized ）

8.2 Special assembly process





ptical Feature

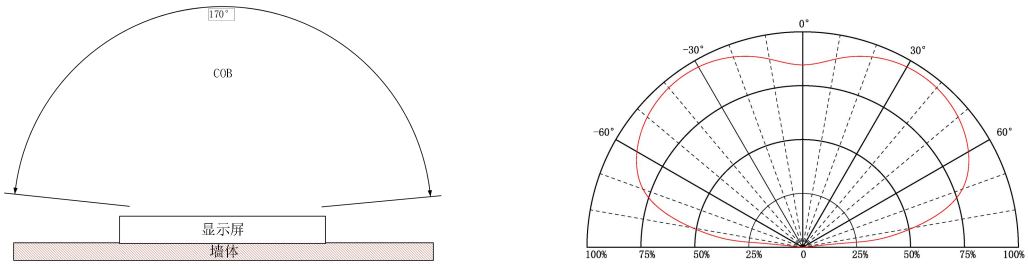

Light Angle and Schematic Diagram

9. Connecting Diagram

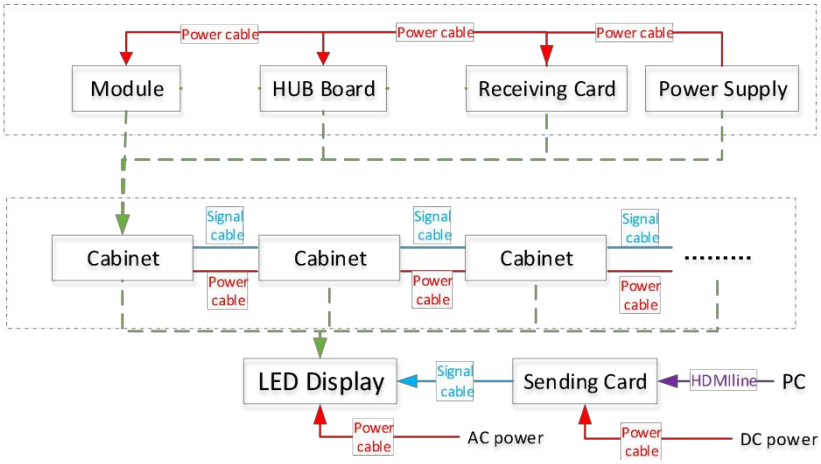

10. Packing and After-sale Service

10.1 Packing

Flight case Size： 930*580*720(L*W*H)mm



10.2 After-sale Service