Product Specification

Datasheet



AV RH-PRO COB SERIES

Product Version：V1.0

Date：20240905

Declaration

Welcome to choose the products of Shenzhen Asia Vision Technology Co., Ltd. To better and more quickly understand the products, please read this specification carefully before using our company's products. If this document helps and facilitates your understanding and use of the products, we are very pleased. When compiling this document, we strive for accuracy and reliability. Content may be modified or changed at any time without prior notice. If you encounter any problems during use or have any suggestions, please contact us according to the contact information provided in the document. We will do our best to provide support for the problems you encounter during use.

Trade Mark Declaration

ASIAVISION **LED** brand is our trademark.

Statement

Content

1. Product Description 3

2. Module Specification 3

3. Cabinet Specification 4

4. Module Dimension Structure 4

5. Module Picture 4

6. Cabinet Picture 4

7. Technical Parameter 5

8. Connecting Diagram 6

9. Packing and After-sale Service 7

1. Product Description

This product is A S I A V I S I O N RH-PRO Series outdoor fine pitch products, applying COB process with 320mm*160mm die-casting mudule, the cabinet size is 640mm*480mm, which is defined as an outdoor COB finel pitch high brightness display.

The product adopts COB encapsulation technology, which is different from the traditional SMD surface-mount encapsulation. It integrates the light-emitting RGB chip on the PCB board instead of soldering LED lamp to the PCB one by one. This technology effectively improves the reliability, light color and protection performance of LED display.

1.1 Application Scope

This technical specification is only applicable to outdoor COB RH-PRO series product.Module size:320mm*160mm and its supporting die cast aluminum cabinet:640mm*480mm.

1.2 Product Features

- Standardized 320mm*160mm size module;
- Wider illuminated viewing angle up to 170 degrees；
- Big high-quality chip, pure gold bonding wires, and pads are immersed gold technology, which is more reliable;
- Flip chip COB support common cathode solution, low consumption, and more stable;
- High refresh rate at low gray, refresh rate ≧7680Hz, Grey scale ≧15Bit；
- Excellent heat dissipation and low light decay, extended service life;
- IP65 of better water-proof, dust-proof, anti-oxidation, anti-static and anti-impact;
- Display brightness up to 4000cd/㎡, support module calibration parameter storage.

2. Module Specification

Item	Specification	Module Picture
Series	RH-PRO Flip chip COB Series	
Material	Die-casting aluminum	
Pixel Pitch	1.81mm	
Resolution	176*88(W*H)dot	
Module Size	320*160(W*H)mm	
Module Weight	600g±10g	

3. Cabinet Specification

Item	Specification	Cabinet Picture
Series	RH-PRO Flip chip COB Series	
Material	Die-casting aluminum	
Pixel Pitch	1.81mm	
Resolution	352*264(W*H)dot	
Cabinet Size	640*480(W*H*D)mm	
Cabinet Weight	11.38Kg	

4. Module Dimension Structure

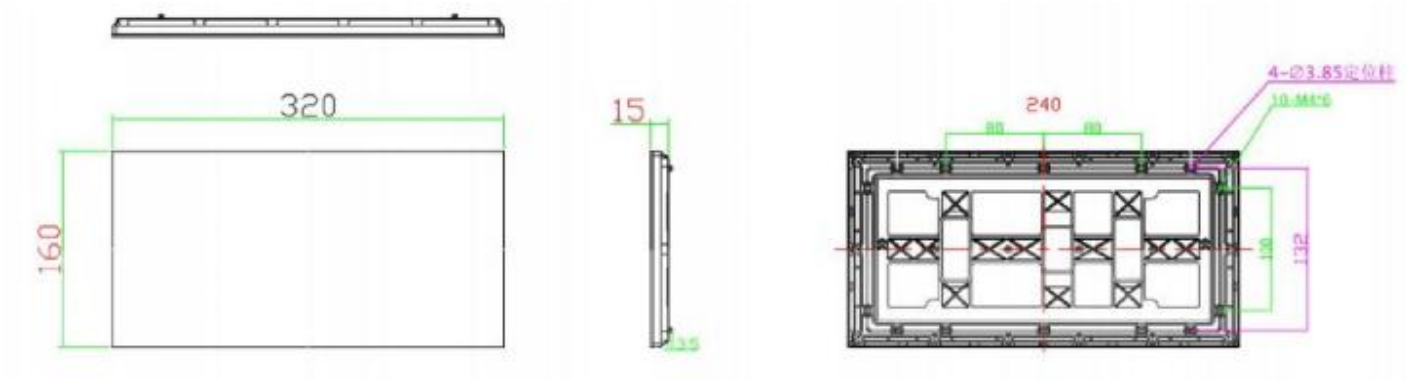

5. Module Picture

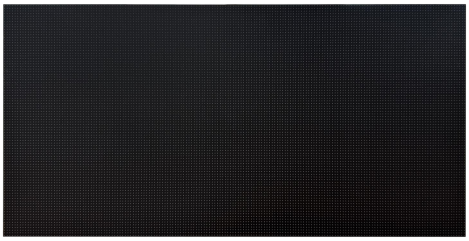

Front View

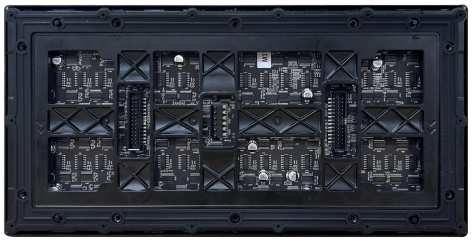

Back View

6. Cabinet Picture

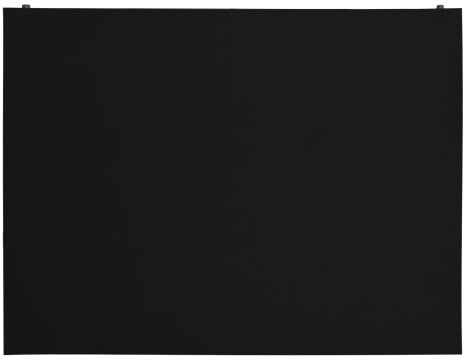

Front View



Back View



Front Side View



Back Side View

7. Technical Parameter

Item	Specification	LED Poster 1.818（RH1.81-PRO）
Module Parameter	**Pixel Pitch (mm)**	1.818
	Pixel Structure	COB 1R1G1B Flip Chip
	Pixel Density(dot//m²)	320*160
	Module Size(WxH)(mm)	176*88
	Backshell Material	1/16
	Module Resolution(W*H)(dot)	≥3840
	Maximum Current(A）	3500-4000
	Supply Voltage(V)	≥10000:1
Cabinet Parameter	**Cabinet Size(W*H*D)(mm)**	640*480
	Chromatic Uniformity	±0.003Cx,Cy
	Horizontal/Vertical View	170°/140°
	Single-point Color Correction	Yes
	Single-point Brightness Correction	Yes
	Protection Level	IP65
	Signal Interface Mode	Customization
	Power Interface Method	Connector
	Input Voltage Range AC(V)	100-240
	Peak Power Consumption(W/m²)	≤780
	Average Power Consumption(W//m²)	≤360
	Working Temperature and Humidity Range	-20℃～+50℃,10%～95%RH
	Storage Temperature and Humidity Range	-40～+70℃,10%～95%RH
	Service Life(H)	≥100000
	Mean Time Between Failure(H)	≥10000

7.1Package Comparison

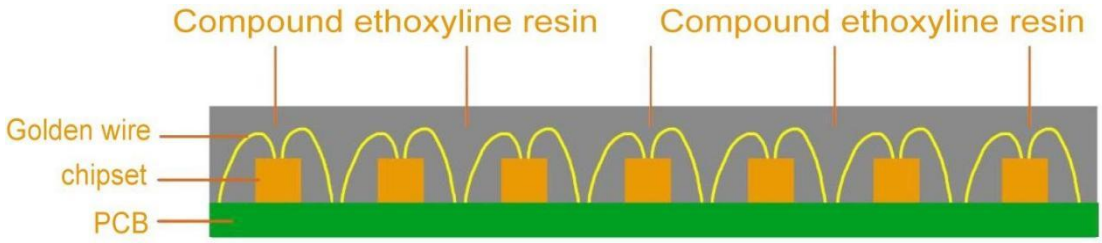

COB （regular technology)

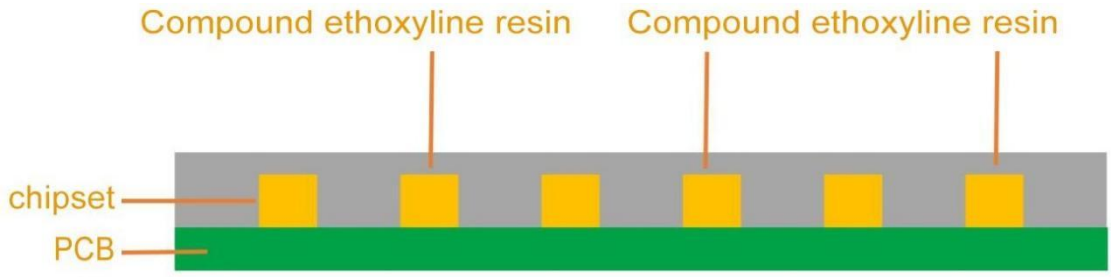

Flip Chip COB（Customized ）

7.2 Optical Feature

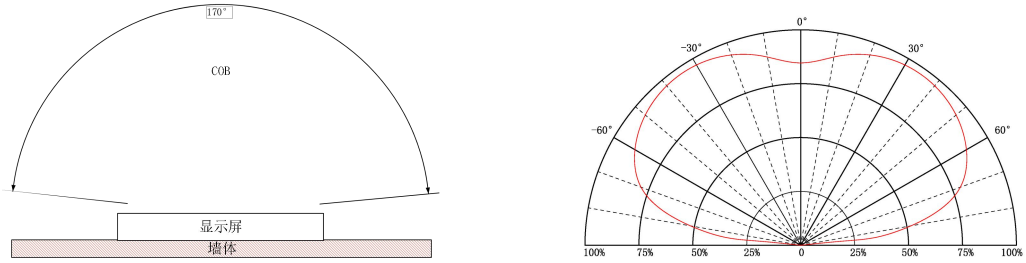

Light Angle and Schematic Diagram

8. Connecting Diagram

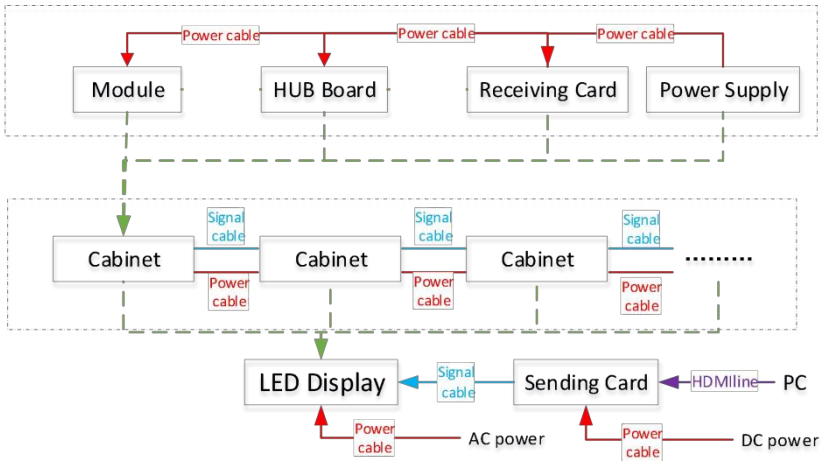

9. Packing and After-sale Service

9.1 Packing

Plywood case/Honeycomb carton/Flight case option



9.2 After-sale Service