# Product Specification

# Datasheet



## AV-EH-PRO COB SERIES

Product Version：V1.0

Date：20240927

## Declaration

Welcome to choose the products of Shenzhen Asia Vision Technology Co., Ltd. To better and more quickly understand the products, please read this specification carefully before using our company's products. If this document helps and facilitates your understanding and use of the products, we are very pleased. When compiling this document, we strive for accuracy and reliability. Content may be modified or changed at any time without prior notice. If you encounter any problems during use or have any suggestions, please contact us according to the contact information provided in the document. We will do our best to provide support for the problems you encounter during use.

### Content


1. Product Description ..... 3

2. 250mm*250mm Module Specification ..... 3

3. 500mm*500mm Cabinet Specification ..... 4

4. Module Picture ..... 4

5. Cabinet Dimension Structure ..... 4

6. Cabinet Picture ..... 5

7. Technical Parameter ..... 6

8. Connecting Diagram ..... 8

9. Packing and After-sale Service ..... 8

## Product Description

The product is EH-PRO COB series outdoor high brightness products, standard cabinet size 500mm * 500mm, standard with the northern set of driver IC, up to 3840Hz refresh frequency, can realize the arc splicing effect. This cabinet structure is stable, not easy to deform, and the box surface adopts anodic antioxidant treatment, resistant to collision and friction, adapted to the leasing process of multiple installation and dismantling.

### 1.1 Application Scope

This technical specification is just applicable to EH-PRO outdoor COB series product. Module size:250*250mm and its die cast aluminum cabinet size is: 500*500mm.

### 1.2 Product Features

- Standardized 500mm*500mm die-casting aluminum cabinet, module adopts die-casting aluminum bottom shell, higher screen splicing flatness;
- Optional pitch： P1.5625, P1.953;
- Flip chip COB technology , low consumption, and good stability, high luminous rate, dustproof, anti-static and anti-knock;
- Hard-wired power box, no wiring, more beautiful;
- The up and down connect with the big magnetic screw,within automatic suction function;
- Optional fixed right-angle splicing, optional ±7.5° arc splicing to satisfy a variety of rental scenarios;
- Big high-quality chip, pure gold bonding wires , and pads are immersed gold technology, which is more reliable ;
- Flip Chip COB with common cathode solution , excellent heat dissipation and low light decay.

## 2. 250mm*250mm Module Specification

| Item | Specification | Module Picture |
|---|---|---|
| Series | COB EH-PRO Series |  |
| Material | Die-cast aluminum | |
| Pixel Pitch | 1.5625mm, 1.953mm | |
| Resolution | 160*160, 128*128(W*H)dot | |
| Module Size | 250*250(W*H)mm | |
| Module Weight | 720g±10g | |

## 500mm*500mm Cabinet Specification

| Item | Specification | Cabinet Picture |
|---|---|---|
| Series | Outdoor COB EH-PRO Series |  |
| Material | Die-casting aluminum | |
| Pixel Pitch | 1.5625mm, 1.953mm | |
| Resolution | 320*320, 256*256(W*H)dot | |
| Cabinet Size | 500*500*90(W*H*D)mm | |
| Cabinet Weight | 9.5kg | |

## 4. Module Picture

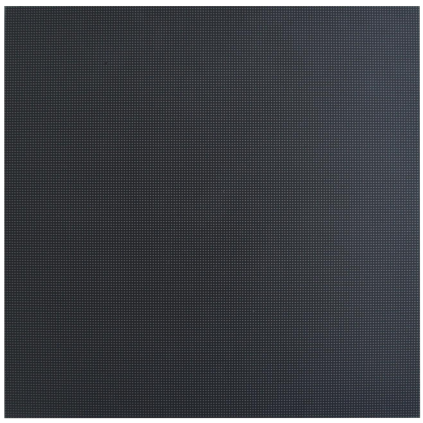

Front View



Back View

## 5. Cabinet Dimension Structure

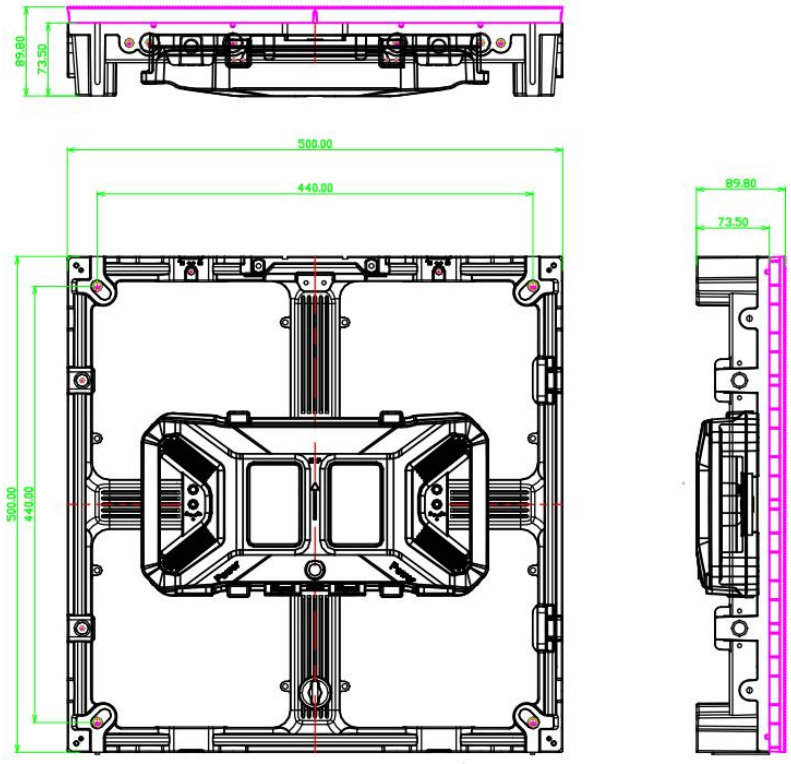

## Cabinet Picture



Front View



Back View



Front Side View



Back Side View

## Technical Parameter

| Item | Specification | EH1.56-PRO | EH1.95-PRO |
|---|---|---|---|
| Module Parameter | **Pixel Pitch (mm)** | 1.5625 | 1.953 |
| | **Pixel Structure** | COB 1RG1B | COB 1RG1B |
| | **Pixel Density(dot/m²)** | 409,600 | 262,144 |
| | **Module Size(W*H)(mm)** | 250*250 | 250*250 |
| | **Backshell Material** | Die Casting Aluminum | Die Casting Aluminum |
| | **Module Resolution(W*H)(dot)** | 160*160 | 128*128 |
| | **Maximum Current(A）** | 3.5/4.5 | 3.5/4.5 |
| | **Supply Voltage(V)** | 3.2/4.2 | 3.2/4.2 |
| | **Scanning Method** | 1/20 | 1/16 |
| | **Refresh Frequency(Hz)** | ≥3840 | ≥3840 |
| | **Illumination(cd/m²)** | 3000 | 3000 |
| | **Driver IC** | Constant Current Drive | Constant Current Drive |
| | **Contrast Ratio** | ≥10000:1 | ≥10000:1 |
| Cabinet Parameter | **Cabinet Size(W*H*D)(mm)** | 500*500*90 | |
| | **Cabinet Material** | Die Casting Aluminum | |
| | **Cabinet Weight(kg)** | 9.5 | |
| | **Enclosure Connection Method** | Quick Lock | |
| | **Installation/Maintenance Methods** | Front or Back Installation/Front or Back Maintenance | |
| | **Color Temperature /Luminance Uniformity** | 3000-12000KAdjustable，≥98% | |
| | **Chromatic Uniformity** | ±0.003Cx，Cy | |
| | **Horizontal/Vertical View** | ≤140° | |
| | **Single-point Color Correction** | Yes | |
| | **Single Point Brightness Correction** | Yes | |
| | **Standard Receiver Card** | A8S-N | |
| | **Frame Rate(Hz)** | 50/60 | |
| | **Protection Level** | IP65 | |
| | **Signal Interface Mode** | RJ45 | |
| | **Power Interface Method** | Connectors | |
| | **Input Voltage Range AC(V)** | 100-240 | |
| | **Peak Power Consumption(W/m²)** | ≤680 | |
| | **Average Power Consumption(W//m²)** | ≤260 | |
| | **Working Temperature and Humidity Range** | -20～+50℃,10%～95%RH | |
| | **Storage Temperature and Humidity Range** | -40～+70℃,10%～95%RH | |
| | **Service Life(H)** | ≥100000 | |
| | **Mean Time Between Failure(H)** | ≥10000 | |

**ackage Comparison**

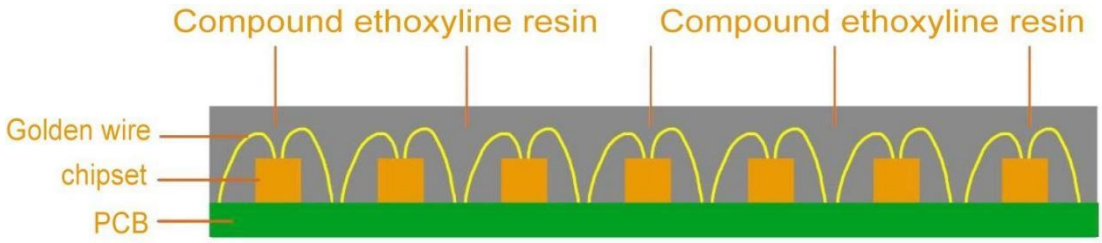


**COB （regular technology)**

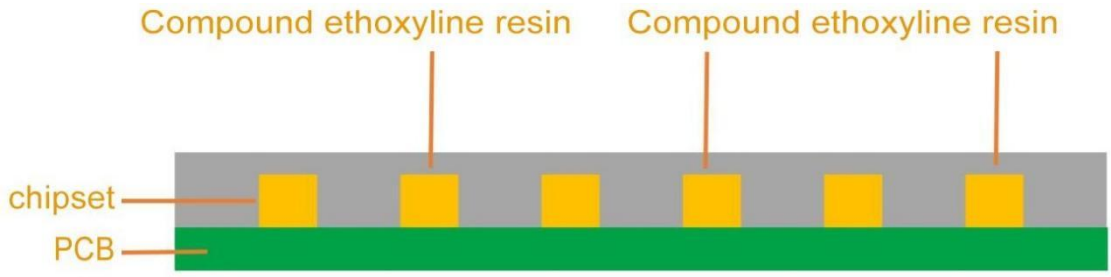


**Flip Chip COB（Customized ）**

## 7.2 Optical Feature

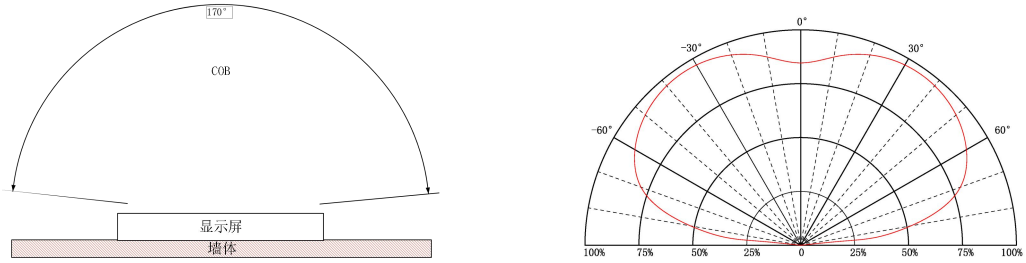


**Light Angle and Schematic Diagram**

## Connecting Diagram

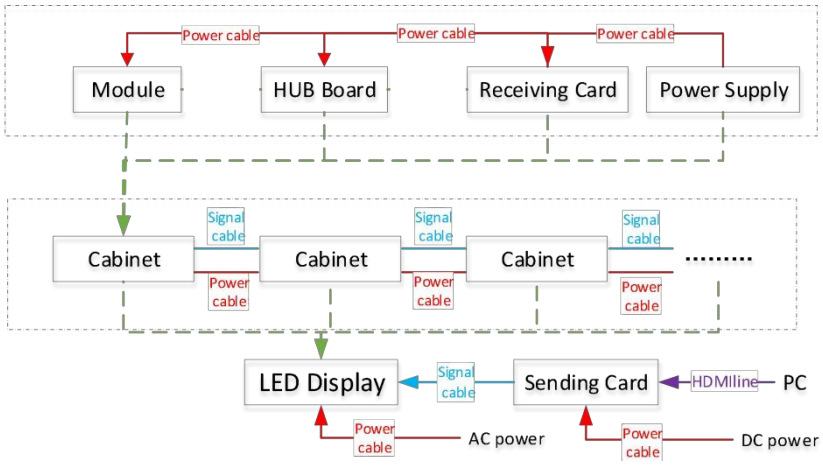


# 9. Packing and After-sale Service

## 9.1 Packing

Plywood case/Honeycomb carton/Flight case option



## 9.2 After-sale Service

If need any help during using display, please for free to contact with your salesman.