Product Specification

Datasheet



AV-EF Outdoor Fixed COB SERIES

Product Version：V1.0

Date：20240926

Declaration

Welcome to choose the products of Shenzhen Asia Vision Technology Co., Ltd. To better and more quickly understand the products, please read this specification carefully before using our company's products. If this document helps and facilitates your understanding and use of the products, we are very pleased. When compiling this document, we strive for accuracy and reliability. Content may be modified or changed at any time without prior notice. If you encounter any problems during use or have any suggestions, please contact us according to the contact information provided in the document. We will do our best to provide support for the problems you encounter during use.

Content

1. Product Description 3

2. 250mm*250mm Module Specification 3

3. 500mm*500mm Cabinet Specification 4

4. Module Picture 4

5. Cabinet Dimension Structure 4

6. Cabinet Picture 5

7. Technical Parameter 6

8. Connecting Diagram 8

9. Packing and After-sale Service 8

Product Description

The product is outdoor fixed of EF Series, which is upgrated from E-PRO Series. The Product is targeted to meet the outdoor fixed installation application of the front maintenance scene of the display products, it adopts COB encapsulation technology, with the standard box size of 500mm*500mm. The product comes standard with the Chipone driver IC, up to 3840Hz refresh frequency. The product can be applied to outdoor advertising machine, pure outdoor and semi-outdoor scenes installed against the wall, support the size expansion according to the actual demand, design corresponding size LEDPoster.

1.1 Application Scope

This technical specification is just applicable to outdoor Fixed COB series product. Module size:250*250mm and its die cast aluminum cabinet size is: 500*500mm.

1.2 Product Features

- Suitable for P1.56/P1.95 pitch COB process modules;
- Standardized 500mm*500mm die-casting aluminum cabinet, module adopts die-casting aluminum bottom shell, higher screen splicing flatness;
- Flip chip COB technology for good stability, high luminous rate, dustproof, anti-static, anti-knock;
- Hard-wired power box, no wiring, more beautiful;
- Optional right-angle splicing to meet the needs of a variety of outdoor fixed installation scenarios;
- Fully front-maintenance design, front and rear protection class IP65, superior waterproof performance;
- The cabinet module is equipped with magnets and safety cords as standard to meet the solid installation of pure pre-maintenance applications;
- Common cathode module design, customized brightness up to 3500-4000Nit.

2. 250mm*250mm Module Specification

Item	Specification	Module Picture
Series	Outdoor COB EF Series	
Material	Die-cast aluminum	
Pixel Pitch	1.5625mm, 1.953mm	
Resolution	160*160, 128*128(W*H)dot	
Module Size	250*250(W*H)mm	
Module Weight	720g±10g	

500mm*500mm Cabinet Specification

Item	Specification	Cabinet Picture
Series	Outdoor Fixed COB EF Series	
Material	Die-casting aluminum	
Pixel Pitch	1.5625mm, 1.953mm	
Resolution	320*320, 256*256(W*H)dot	
Cabinet Size	500*500*75(W*H*D)mm	
Cabinet Weight	9.1kg	

4. Module Picture

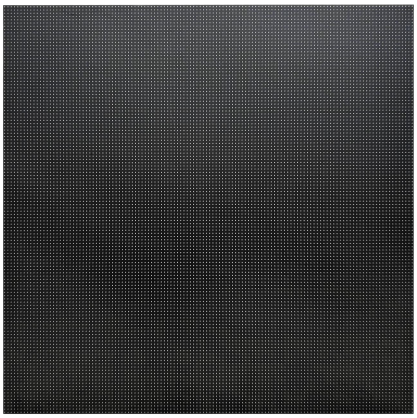

Front View



Back View

5. Cabinet Dimension Structure

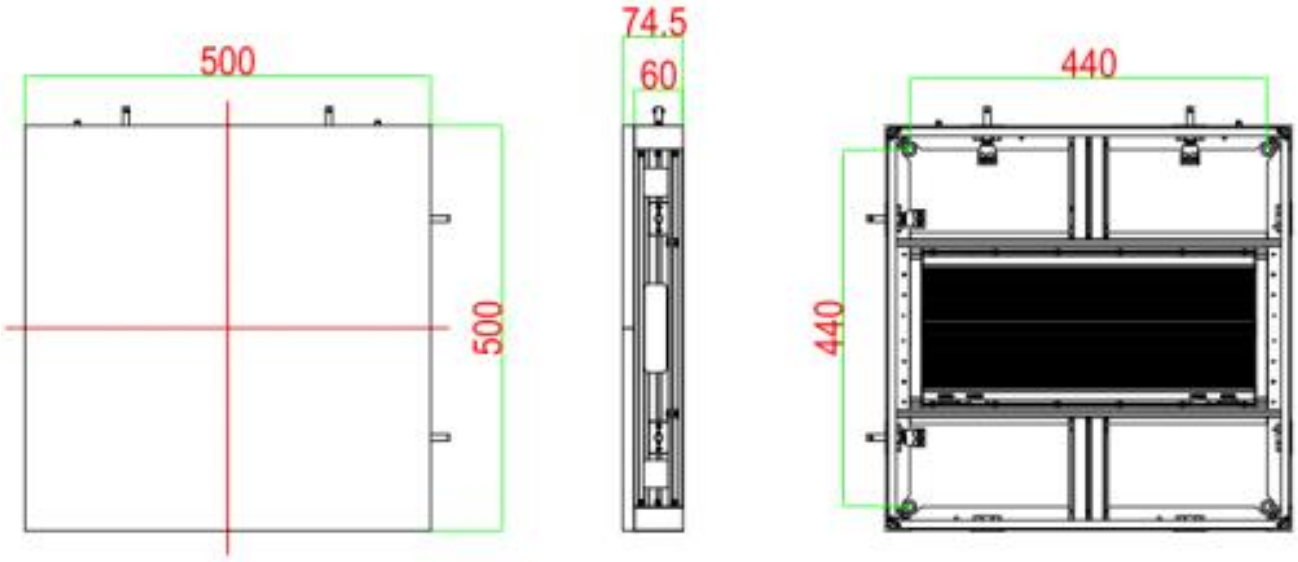

abinet Picture



Front View



Back View



Front Side View



Back Side View

Technical Parameter

Item	Specification	EF1.56	EF1.95
Module Parameter	**Pixel Pitch (mm)**	1.5625	1.953
	Pixel Structure	COB 1RG1B	
	Pixel Density(dot/m²)	409,600	262,144
	Module Size(W*H)(mm)	250*250	250*250
	Backshell Material	Die Casting Aluminum	Die Casting Aluminum
	Module Resolution(W*H)(dot)	160*160	126*126
	Maximum Current(A）	3.5/4.5	3.5/4.6
	Supply Voltage(V)	3.2/4.2	3.2/4.3
	Scanning Method	1/20	1/20
	Refresh Frequency(Hz)	≥3840	≥3840
	Illumination(cd/m²)	3000	3000
	Driver IC	Constant Current Drive	
	Contrast Ratio	≥10000:1	
Cabinet Parameter	**Cabinet Size(W*H*D)(mm)**	500*500*74.5	
	Cabinet Material	Aluminum profile	
	Cabinet Weight(kg)	9.10	
	Enclosure Connection Method	Quick Lock	
	Installation/Maintenance Methods	Front Maintenance	
	Color Temperature /Luminance Uniformity	3000-12000K Adjustable，≥98%	
	Chromatic Uniformity	±0.003Cx,Cy	
	Horizontal/Vertical View	≥170°/≥160°	
	Single-point Color Correction	Yes	
	Single Point Brightness Correction	Yes	
	Standard Receiver Card	A8S-N	
	Frame Rate(Hz)	50/60	
	Protection Level	IP65	
	Signal Interface Mode	RJ45	
	Power Interface Method	Connectors	
	Input Voltage Range AC(V)	100-240	
	Peak Power Consumption(W/m²)	≤620	
	Average Power Consumption(W/m²)	≤285	
	Working Temperature and Humidity Range	-20～+50℃,10%～95%RH	
	Storage Temperature and Humidity Range	-40～+70℃,10%～95%RH	
	Service Life(H)	≥100000	
	Mean Time Between Failure(H)	≥10000	

omparison

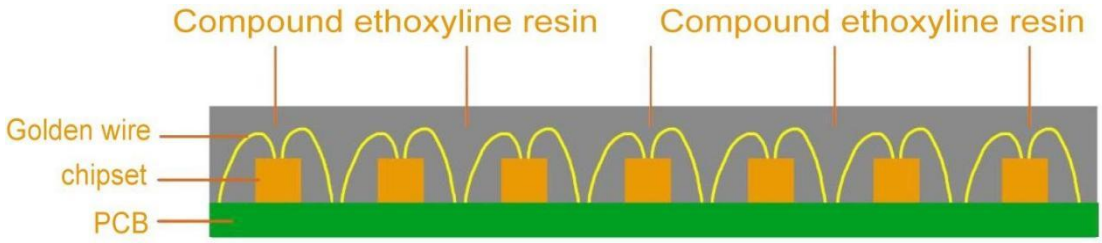

COB （regular technology)

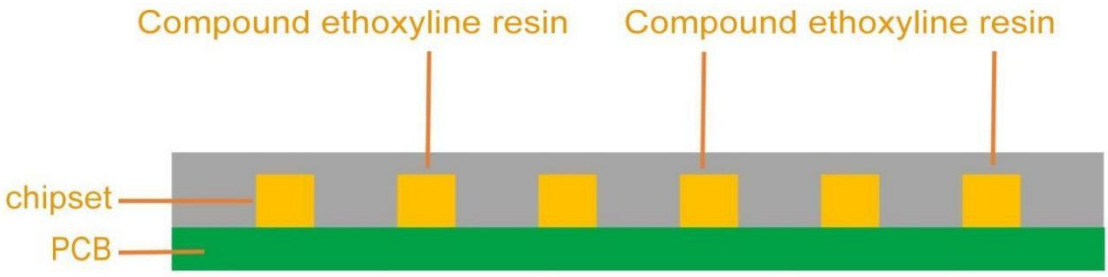

Flip Chip COB（Customized ）

7.2 Optical Feature

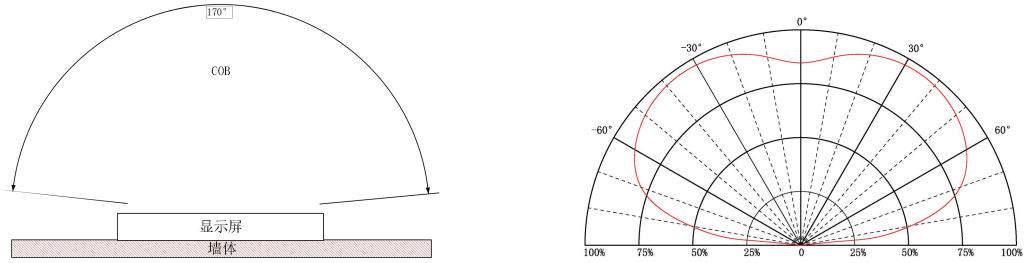

Light Angle and Schematic Diagram

Connecting Diagram

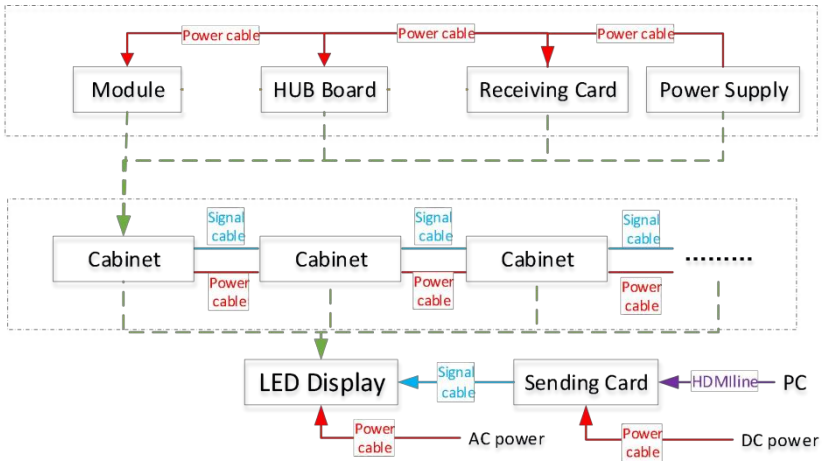

9. Packing and After-sale Service

9.1 Packing

Plywood case/Honeycomb carton/Flight case option



9.2 After-sale Service

If need any help during using display, please for free to contact with your salesman.