Product Specification

Datasheet

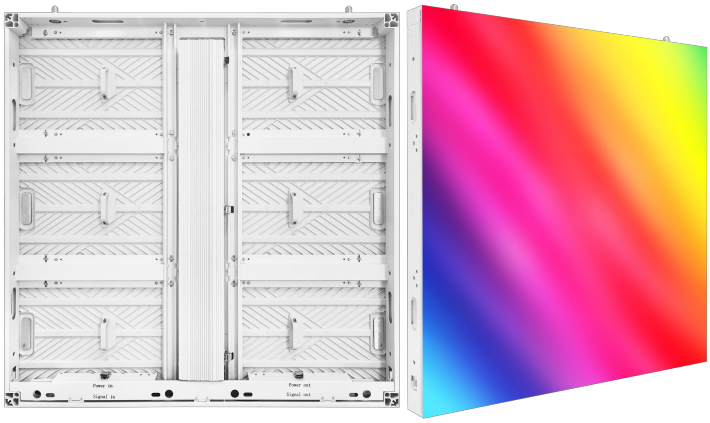

LR OUTDOOR D-PRO SERIES

Product Version：V2.0

Date：20240820

Declaration

Welcome to choose the products of Shenzhen Asia Vision Technology Co., Ltd. To better and more quickly understand the products, please read this specification carefully before using our company's products. If this document helps and facilitates your understanding and use of the products, we are very pleased. When compiling this document, we strive for accuracy and reliability. Content may be modified or changed at any time without prior notice. If you encounter any problems during use or have any suggestions, please contact us according to the contact information provided in the document. We will do our best to provide support for the problems you encounter during use.

Content

1. Product Description 3

2. 480mm*320mm Module Specification 3

3. 960mm*960mm Cabinet Specification 4

4. Module Dimension Structure 4

5. Module Picture 4

6. Cabinet Dimension Structure 5

7. Cabinet Picture 5

8. Technical Parameter 6

9. Connecting Diagram 7

10. Packing and After-sale Service 7

roduct Description

This product is D-PRO series outdoor front and back maintenance waterproof product. Using 480mm*320mm waterproof die-casting module, 960mm*960mm profile cabinet.Can achieve front installation or maintenance and back installation or maintenance.This series of products can be used in various display application scenarios,such as outdoor advertising exterior walls and scenic area exteriors walls,where maintenance space cannot be reserved.It has the characteristics of high contrast,realistic image,high protection ability,excellent weather resistance and long service life.

1.1 Application Scope

This technical date is only applicable to D-PRO series 480mm*320mm modules and supporting profile cabinet.

1.2 Product Features

- Module size 480mm*320mm;5mm/5.7mm/6.67mm/8mm/10mm pixel pitch can be optional.
- The frame is assembled using profile structures,with high overall processing accuracy and high strength,which can save traditional installation of steel structures.
- Dual-voltage power supply saves more than 30% energy consumption compared with traditional outdoor products.
- The overall cabinet is lightweight, installation and transportation more convenient.
- The die-casting aluminum module design allows for optional contact heat dissipation of the IC,making the temperature of the light panel even lower.
- Adopting full hard connection,the overall waterproof performance reaches IP65.

2. 480mm*320mm Module Specification

Item	Specification	Module Picture
Model No.	D-PRO series	
Material	Die Casting Aluminum	
Pixel Pitch	5mm,5.7mm,6.67mm,8mm,10mm	
Resolution	96*64,84*56,72*48,60*40,48*32(W * H)dot	
Module Size	480*320(W * H)mm	
Module Weight	1.5kg	

60mm*960mm Cabinet Specification

Item	Specification	Module Picture
Series	D-PRO series	
Material	Aluminum profile	
Pixel Pitch	5mm,5.7mm,6.67mm,8mm,10mm	
Resolution	192*192,168*168,144*144,120*120,96*96 (W * H)dot	
Cabinet Size	960*960*83(W * H *D)mm	
Cabinet Weight	27kg	

4. Module Dimension Structure

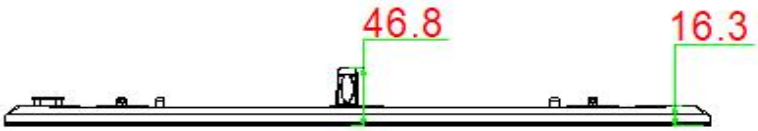

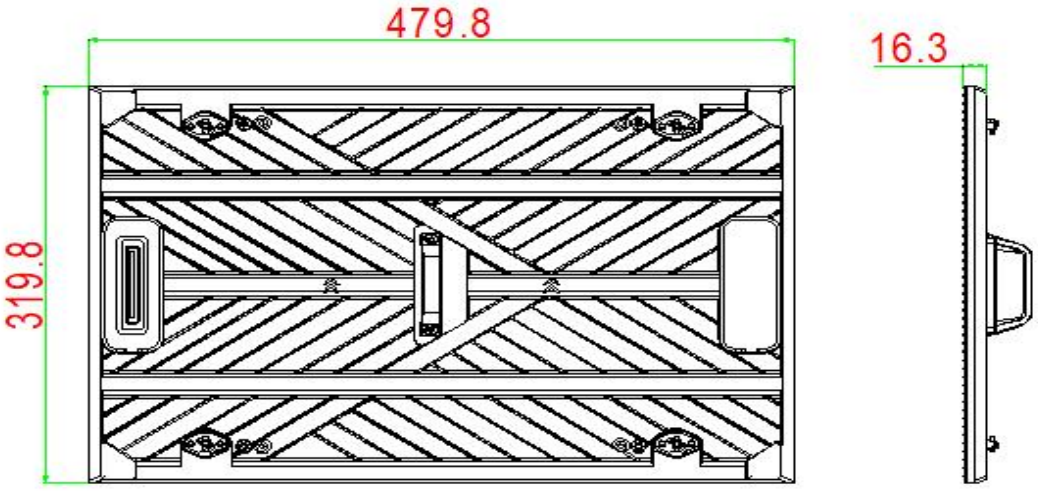

5. Module Picture

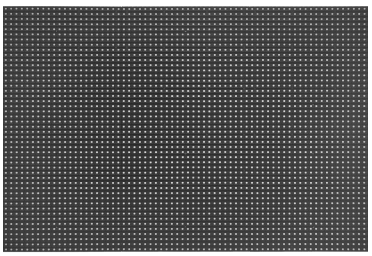

Front View



Back View

abinet Dimension Structure

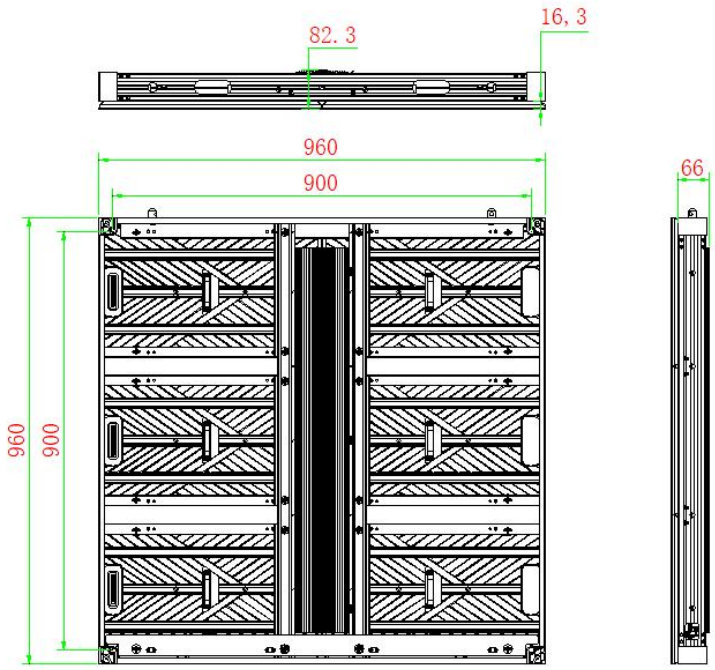

7. Cabinet Picture

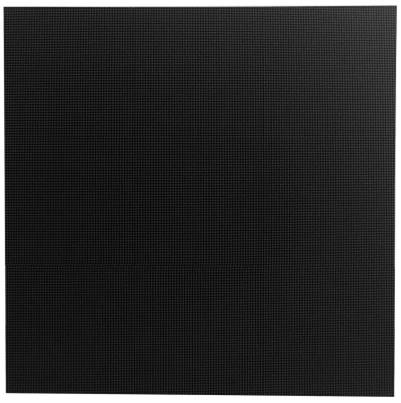

Front view

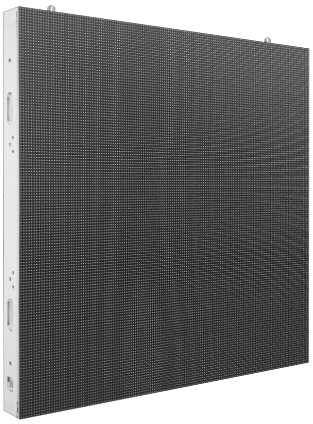

Side view



Back view



Side view

echnical Parameter

Item	Specification	DH5-PRO	DH5.7-PRO	DH6.67-PRO	DH8-PRO	DH10-PRO
Module Parameter	**Pixel Pitch (mm)**	5	5.7	6.67	8	10
	Pixel Structure	1R1G1B (Common Cathode)	1R1G1B (Common Anode)			
	Pixel Density(dot//m²)	40,000	30,772	22,477	15,625	10,000
	Module Size(W*H)(mm)	480*320	480*320	480*320	480*320	480*320
	Backshell Material	Die Casting Aluminum				
	Module Resolution(W*H)(dot)	96*64	84*56	72*48	60*40	48*32
	Maximum Current(A）	9+13	9+13	9+13	9+13	9+13
	Supply Voltage(V)	3.2+4.2	3.2+4.2	3.2+4.2	3.2+4.2	3.2+4.2
	Scanning Method	1/8	1/7	1/6	1/5	1/4
	Refresh Frequency(Hz)	≥1920	≥1920	≥1920	≥1920	≥1920
	Illumination(cd//m²)	5000~5500		5500~6000		6000~6500
	Driver IC	Constant Current Drive				
	Contrast Ratio	≥5000:1				
Cabinet Parameter	**Cabinet Size(W*H*D)(mm)**	960*960*83				
	Cabinet Material	Profile Aluminum				
	Cabinet Weight(kg)	27				
	Enclosure Connection Method	Screw Fixing				
	Installation/Maintenance Methods	Front and rear installation/front maintenance, optional rear maintenance				
	Color Temperature /Luminance Uniformity	3200-9300K Adjustable; ≥98%				
	Chromatic Uniformity	± 0.003Cx,Cy				
	Horizontal/Vertical View	≥140°/≥120°				
	Single-point Color Correction	Available				
	Single Point Brightness Correction	Available				
	Standard Receiver Card	A5S plus				
	Frame Rate(Hz)	50/60				
	Protection Level	IP65				
	Signal Interface Mode	RJ45				
	Power Interface Method	Connector				
	Input Voltage Range AC(V)	100-240				
	Peak Power Consumption(W/m²)	≤620				
	Average Power Consumption(W//m²)	≤310				
	Working Temperature and Humidity Range	-20℃～+50℃,10%～95%RH				
	Storage Temperature and Humidity Range	-40～+70℃,10%～95%RH				
	Service Life(H)	≥100000				
	Mean Time Between Failure(H)	≥10000				

ptical Feature

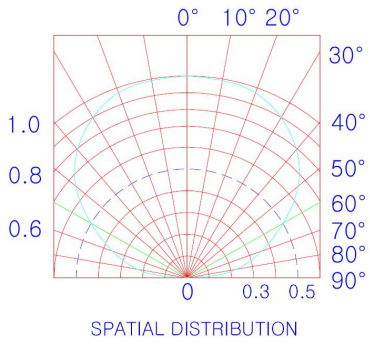

Luminous Diagram

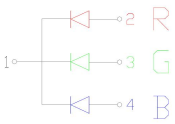

Lamp Circuit Diagram

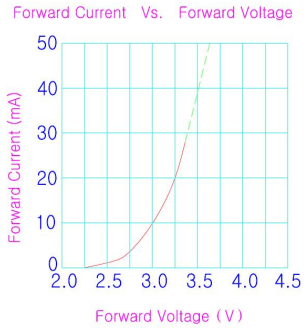

Voltage-current Curve of Lamp

9. Connecting Diagram

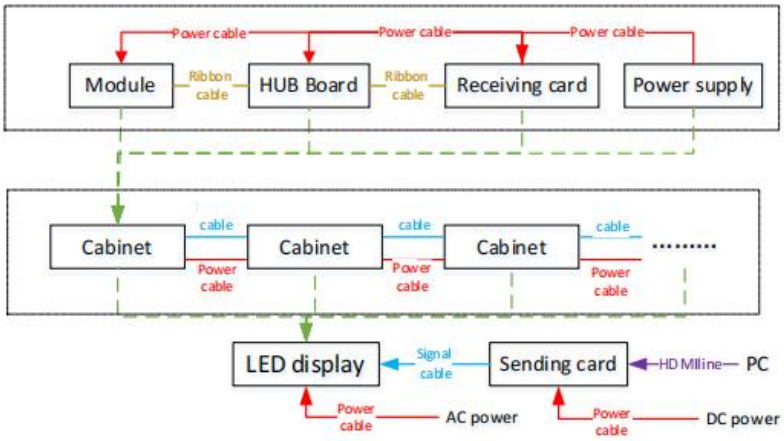

10. Packing and After-sale Service

10.1 Packing

Plywood case/Honeycomb carton/Flight case option



10.2 After-sale Service

If need any help during using display, please for free to contact your salesman.