Product Specification

Datasheet



AV-CV-PRO&CV-PRO+ FLIP CHIP COB SERIES

Product Version：V1.0

Date：20250510

Declaration

Welcome to choose the products of Shenzhen Asia Vision Technology Co., Ltd. To better and more quickly understand the products, please read this specification carefully before using our company's products. If this document helps and facilitates your understanding and use of the products, we are very pleased. When compiling this document, we strive for accuracy and reliability. Content may be modified or changed at any time without prior notice. If you encounter any problems during use or have any suggestions, please contact us according to the contact information provided in the document. We will do our best to provide support for the problems you encounter during use.

Content

1. Product Description 3

2. 150mm*337.5mm Module Specification 4

3. 600mm*337.5mm Cabinet Specification 4

4. Module Dimension Structure 4

5. Module Picture 5

6. Cabinet Dimension Structure 5

7. Cabinet Picture 6

8. Cabinet Interior Structure 6

9. Internal Connectors 7

10. Technical Parameter 8

11. Connecting Diagram 10

12. Packing and After-sale Service 10

oduct Description

upgrades a new ultra-thin CV-PRO&CV-PRO+ series Standard cabinet size:600mm*337.5mm with Flip Chip COB process, thickness within 28mm. 150mm*337.5mm modules in a 4*1 layout reduce horizontal seams, improve screen flatness and uniformity, and enhance installation efficiency.

1.1 Application Scope

This technical specification is only applicable to indoor COB CV-PRO&CV-PRO+ series product.Module size:150mm*337.5mm and its supporting die cast aluminum cabinet:600mm*337.5mm*28mm.

1.2 Product Features

- Ultra-high contrast: the use of unique encapsulation materials, the formation of a stable surface treatment process, compared with the epoxy resin used by peers, has a higher contrast, as well as better consistency of the ink color, the true realization of high-contrast;
- Compatible pitch(mm): 0.93mm /1.25mm /1.56mm
- Extremely high reliability: full flip chip, no need to weld wires, completely solve the failure caused by the factor of weld wires, greatly reduce the risk of failure caused by metal migration, no SMD pads exposed, lower failure rate;
- Ultimate small splicing: adopts ultra-thin die-casting aluminum cabinet design, higher precision (≤0.1mm); and adopts large module design, which ensures the splicing precision and flatness extremely well;
- Seven-star protection: unique encapsulation materials, forming a stable surface treatment process, anti-collision, shock, moisture, water, dust, salt spray, anti-static, applicable to a variety of special use of the environment, 360 ° all-round protection;
- Micro-pitch large size: 16:9 golden display ratio design, 25mm cabinet thickness , 600x337.5mm (27 inches) cabinet size , can be spelled out for the 54-inch isometric size, can be dual-card dual-power backup design, a perfect replacement for LCD, DLP and other standard display products;
- Waterproof and easy to clean: the modules can be cleaned with a damp cloth, making it easy to maintain;

2. 150mm*337.5mm Module Specification

Item	Specification	Module Picture
Series	CV-PRO Flip chip COB Series	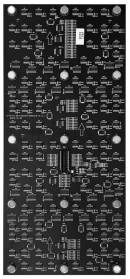
Material	No Plastic housing	
Pixel Pitch	0.9375mm, 1.25mm, 1.5625mm	
Resolution	160*360, 120*270, 96*216(W*H)dot	
Module Size	150*337.5(W*H)mm	
Module Weight	340g±10g	

3. 600mm*337.5mm Cabinet Specification

Item	Specification	Cabinet Picture
Series	CV-Flip chip COB Series	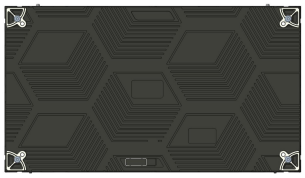
Material	Die-casting aluminum	
Pixel Pitch	0.9375mm, 1.25mm, 1.5625mm	
Resolution	640*360,480*270,384*216(W*H)dot	
Cabinet Size	600* 337.5*28(W*H*D)mm	
Cabinet Weight	3.78Kg	

4. Module Dimension Structure

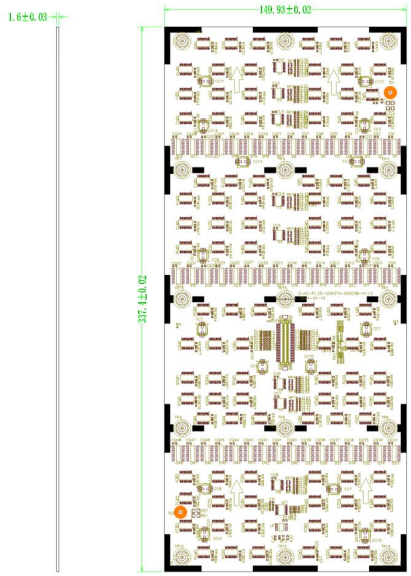

odule Picture

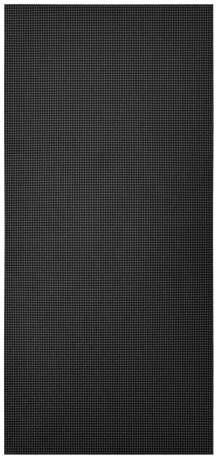

Front View

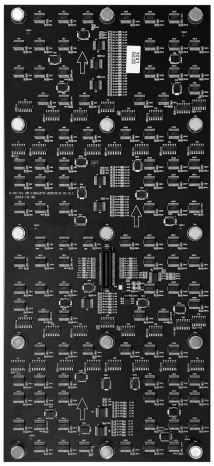

Back View

6. Cabinet Dimension Structure

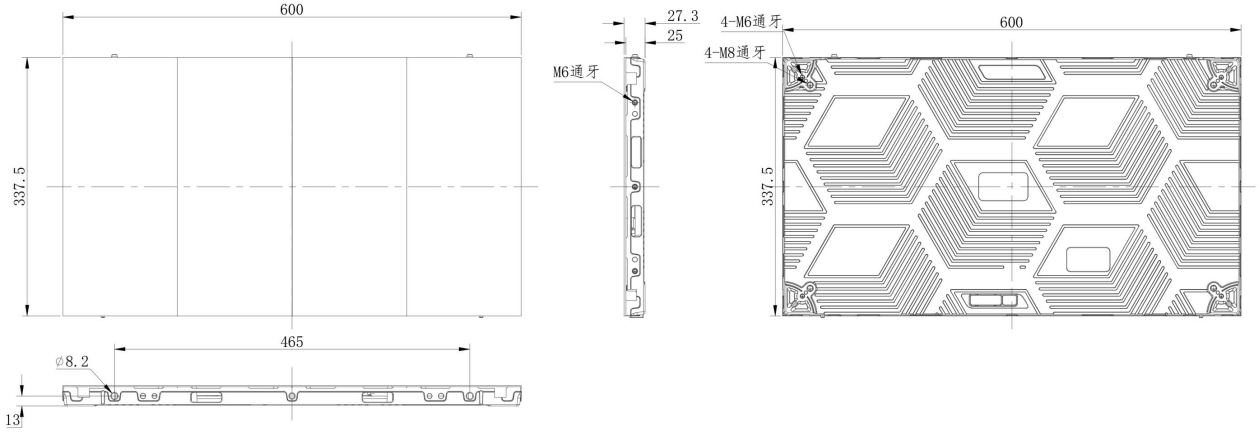

7. Cabinet Picture



Front View



Back View



Back side View

8. Cabinet Interior Structure

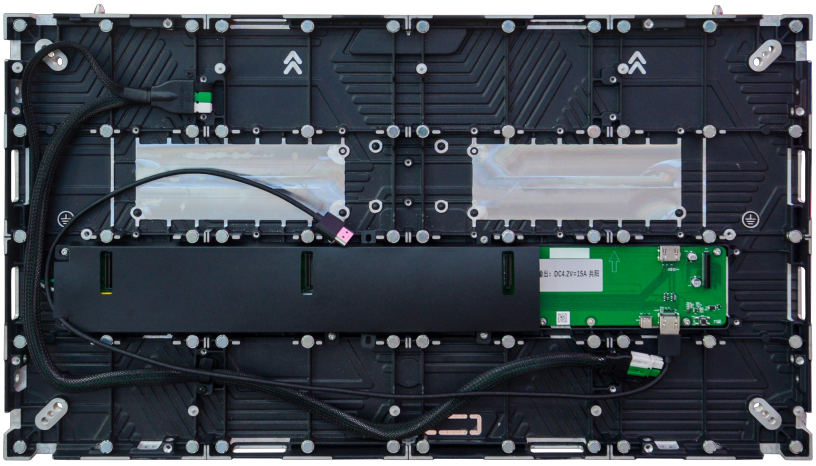

9. Internal Connectors

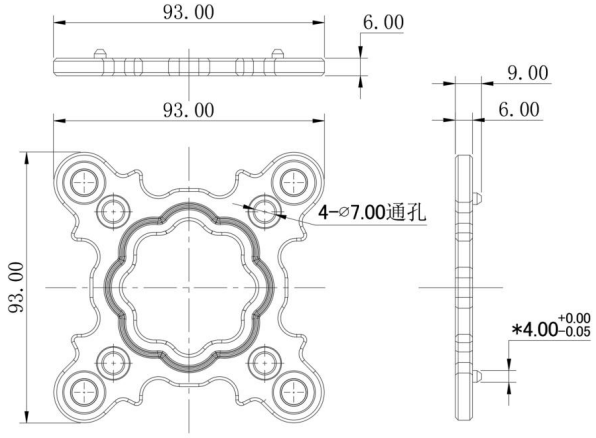

4-hole connecting plate

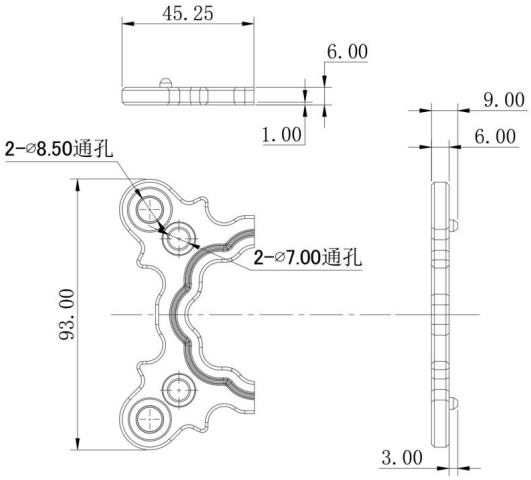

2-hole connecting plate

ection piece configuration:

Number of straight screen two-hole connectors = (column -1) *2, 1 spare part

Number of straight screen four-hole connectors = (row -1) x (column -1), 1 spare part

The number of connecting plate boxes is 1:1.3

Technical Parameter

Item	Specification	CV-PRO0.93	CV-PRO1.25	CV-PRO1.56
Module Parameter	**Pixel Pitch (mm)**	0.9375	1.25	1.5625
	Pixel Structure	COB 1R1G1B		
	Pixel Density(dot//m²)	1,137,778	640,000	409,600
	Module Size(W*H)(mm)	150*337.5	150*337.5	150*337.5
	Backshell Material	No Backshell		
	Module Resolution(W*H)(dot)	160*360	120*270	96*216
	Maximum Current(A）	5	5	5
	Supply Voltage(V)	DC4.2	DC4.2	DC4.2
	Scanning Method	1/60	1/60	1/48
	Refresh Frequency(Hz)	≥3840	≥3840	≥3840
	Illumination(cd//m²)	0-600 adjustable, max brightness ≥ 1200		
	Driver IC	Constant Current Drive		
	Contrast Ratio	≥10000:1		
Cabinet Parameter	**Cabinet Size(W*H*D)(mm)**	600*337.5*28		
	Cabinet Material	Die Casting Aluminum		
	Cabinet Weight(kg)	3.78		
	Enclosure Connection Method	Screw Fixing		
	Installation/Maintenance Methods	Front or back Installation/Front Maintenance		
	Color Temperature /Luminance Uniformity	3000-18000K Adjustable; ≥98%		
	Chromatic Uniformity	±0.003Cx,Cy		
	Horizontal/Vertical View	160°（±10°）/160°（±10°）		
	Single-point Color Correction	Standard Configuration		
	Single Point Brightness Correction	Standard Configuration		
	Frame Rate(Hz)	50/60		
	Protection Level	IP40		
	Signal Interface Mode	HDMI		
	Power Interface Method	Anderson		
	Input Voltage Range AC(V)	100-240		
	Peak Power Consumption(W/m²)	≤350		
	Average Power Consumption(W//m²)	≤150		
	Working Temperature and Humidity Range	-10℃～+40℃,10%～90%RH		
	Storage Temperature and Humidity Range	-20～+60℃,10%～90%RH		
	Service Life(H)	≥100000		
	Mean Time Between Failure(H)	≥10000		

Ite	cification	CV-PRO+0.93	CV-PRO+1.25	CV-PRO+1.56
Module Parameter	**Pixel Pitch (mm)**	0.9375	1.25	1.5625
	Pixel Structure	COB 1R1G1B		
	Pixel Density(dot//m²)	1,137,778	640,000	409,600
	Module Size(W*H)(mm)	150*337.5	150*337.5	150*337.5
	Backshell Material	No Backshell		
	Module Resolution(W*H)(dot)	160*360	120*270	96*216
	Maximum Current(A）	5	5	5
	Supply Voltage(V)	DC4.2	DC4.2	DC4.2
	Scanning Method	1/60	1/60	1/48
	Refresh Frequency(Hz)	≥3840	≥3840	≥3840
	Illumination(cd//m²)	700-1500 adjustable, max brightness		
	Driver IC	Constant Current Drive		
	Contrast Ratio	≥8000:1		
Cabinet Parameter	**Cabinet Size(W*H*D)(mm)**	600*337.5*28		
	Cabinet Material	Die Casting Aluminum		
	Cabinet Weight(kg)	3.5		
	Enclosure Connection Method	Screw Fixing		
	Installation/Maintenance Methods	Front or back Installation/Front Maintenance		
	Color Temperature /Luminance Uniformity	3000-18000K Adjustable; ≥98%		
	Chromatic Uniformity	±0.003Cx,Cy		
	Horizontal/Vertical View	160°（±10°）/140°（±10°）		
	Single-point Color Correction	Standard Configuration		
	Single Point Brightness Correction	Standard Configuration		
	Frame Rate(Hz)	50/60		
	Protection Level	IP40		
	Signal Interface Mode	HDMI		
	Power Interface Method	Anderson		
	Input Voltage Range AC(V)	100-240		
	Peak Power Consumption(W/m²)	≤200		
	Average Power Consumption(W//m²)	≤90		
	Working Temperature and Humidity Range	-10℃～+40℃,10%～90%RH		
	Storage Temperature and Humidity Range	-20～+60℃,10%～90%RH		
	Service Life(H)	≥100000		
	Mean Time Between Failure(H)	≥10000		

onnecting Diagram

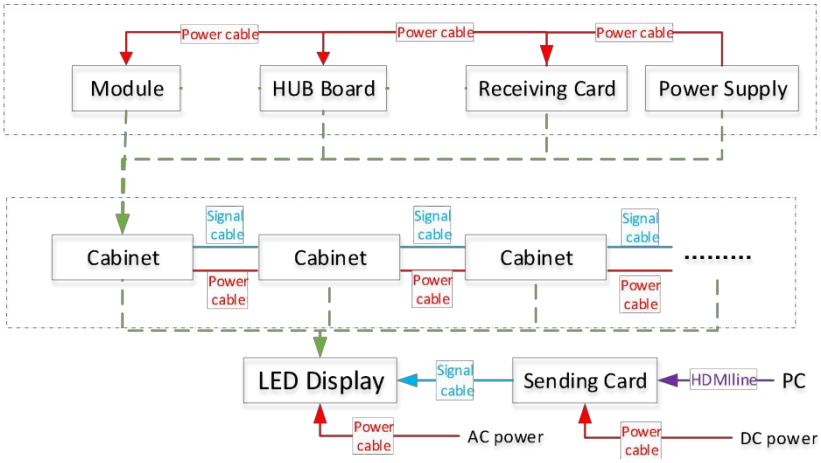

12. Packing and After-sale Service

12.1 Packing

The module is packaged in cardboard boxes, and when shipped in bulk, the module and box are packaged separately. One cardboard box contains 40 modules (corresponding to 10 boxes), and the box is packaged in wooden boxes. One wooden box contains 15 boxes.









12.2 After-sale Service

If need any help during using display, please for free to contact your salesman.