Product Specification

Datasheet



COB All-In-One Solution

Product Version：V5.1

Date： 20251218

Declaration

Welcome to choose the products of Shenzhen Asia Vision Technology Co., Ltd. To better and more quickly understand the products, please read this specification carefully before using our company's products. If this document helps and facilitates your understanding and use of the products, we are very pleased. When compiling this document, we strive for accuracy and reliability. Content may be modified or changed at any time without prior notice. If you encounter any problems during use or have any suggestions, please contact us according to the contact information provided in the document. We will do our best to provide support for the problems you encounter during use.

Content

1. Product Description 3

2. Product Features 3

3. Module Specification 4

4. Cabinet Specification 4

5. Module Dimension Structure 4

6. Module Picture 5

7. Cabinet Dimension Structure 5

8. Cabinet Picture 5

9. Technical Parameter 7

10. Connecting Diagram 8

11. Packing and After-sale Service 8

1. Product Description

This product is efficiently integrated the display and control functions for LED screen, which applied in conference Room, TV studio, school and training agency.

COB All-In-One Solution LED screen offers smoother interactive operations, flexible system integration, and easier daily maintenance. It also supports the addition of APP and APK software, breaking through the limitations of traditional conference display devices such as small size, low brightness, and poor image quality.

Adopted COB technology effectively improves the reliability, light color and protection performance of LED display. It can effectively achieve waterproof, dust proof, oxidation resistance, and static electricity prevention. Customized brightness to meet the needs of different applications.

2. Product Features

- Based on ANDROID deep customization, reserved OPS host control interface；
- Surface light source, good consistency, no sensitive moire pattern, and viewing angle up to 170 degrees；
- High refresh 3840Hz, high grayscale level 18Bit (software on+2Bit)；
- Waterproof, dust proof, anti oxidation, anti-static, anti impact, high stability；
- Supports 32 dots infrared touch；
- With remote control, human-machine interaction can be carried out, including common operations such as volume adjustment, brightness adjustment, source switching, and power on/off；
- Supports local and online high-definition video playback, supports 4K HDR format video decoding and playback；
- Dual wireless network card design, capable of simultaneously accessing WiFi and enabling wireless hot-spots；
- Supports Bluetooth 4.0, compatible with commonly used peripherals such as Bluetooth mouse, Bluetooth keyboard, Bluetooth audio, etc；
- Support for built-in and external 3.5mm audio interfaces；
- Supports multi platform wireless projection for Windows, Mac, iPhone/iPad, and Android, and supports HTML5 browser；
- Compatible with mainstream conference peripherals, including cameras, speakers, laser pens, etc.

3.Module Specification

Item	Specification	Module Picture
Series	COB Module	
Pixel Pitch	0.9375mm，1.25mm，1.5625mm	
Resolution	160*360，120*270，96*216(W*H)dot	
Module Size	150*337.5(W*H)mm	
Module Weight	340g±10g	

4. Cabinet Specification

Item	Specification	Cabinet Picture
Cabinet Material	Die-casting aluminum	
Pixel Pitch	0.9375mm，1.25mm，1.5625mm	
Single box Resolution	640*360，480*270，384*216(W*H)dot	
Unit Size	600* 337.5*27.3(W*H*D)mm	
Cabinet Weight	3.78kg	

5. Module Dimension Structure

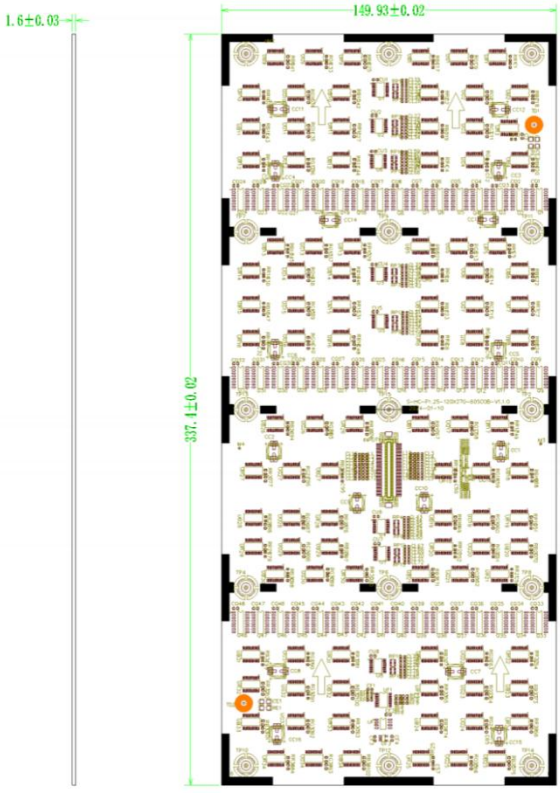

6. Module Picture



Front View

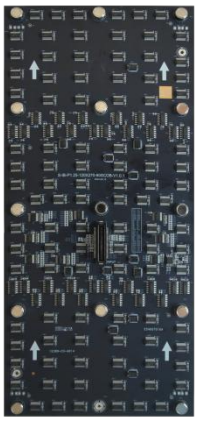

Back View

7. Cabinet Dimension Structure

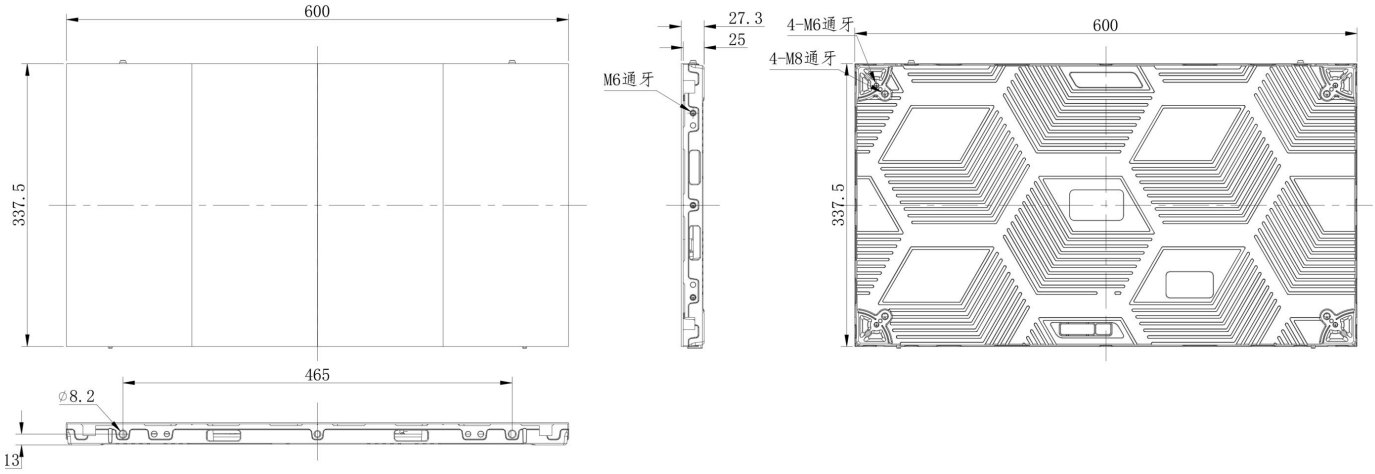

8. Cabinet Picture



Front View



Back View

8.1 All-In-One LED Solution Picture



Front View



Back View



Front Side View



Back Side View

9. Technical Parameter

Item	Type	CV-PRO0.93	CV-PRO1.25	CV-PRO1.56
Module Parameter	**Pixel Pitch (mm)**	0.93	1.25	1.56
	Pixel Structure	COB 1R1G1B Flip Chip Process		
	Pixel Density(dot/㎡)	1137778	640000	409600
	Unit Size (W*H*D) mm	27 inch，600*337.5*27.3		
	Single box Resolution (W*H)(dot)	640*360	480*270	384*216
	Maximum Current(A）	5	5	5
	Supply Voltage(V)	4.2	4.2	4.2
	Scanning Method	1/60	1/60	1/48
	Refresh Frequency(Hz)	≥3840	≥3840	≥3840
	Illumination(cd/㎡)	Adjustable from 0 - 600, peak brightness ≥1200		
	Contrast Ratio	≥10000：1（Glossy and Matte Available）		
Cabinet Parameter	**Overall Size(inch)**	81	108	135
	Applicable Scenario Area(㎡)	30-60	50-80	60-100
	Video Source Bit Depth(bit)	8	8	8
	Android Version	Android 8.0	Android 11.0	
	RAM	LPDDR4-2GB		
	ROM	32GB		
	Color Mode	RGB：YCbCr4:4:4 YCbCr4:2:2		
	Horizontal/Vertical View	≥160°（±10°）/160°（±10°）		
	Single-point Color Correction	Yes		
	Single Point Brightness Correction	Yes		
	Color Temperature/Luminance /Chromatic Uniformity	3000-18000K Adjuatable；≥98%；±0.003Cx,Cy		
	Frame Rate(Hz)	50 / 60		
	Protection Level	IP40		
	Device Interface Method	HDMI1.3×2（One is used for OPS） USB2.0×2		
	Control Interface Method	ARM TTL serial port × 1, 100 Mbps network port × 1, OPS computer host interface × 1. Android system debugging interface × 1, RS232 serial port × 1		
	Input Voltage Range AC(V)	100-240		
	Peak Power Consumption(W/㎡)	≤350		
	Average Power Consumption(W/㎡)	≤170		
	Working Temperature and Humidity Range	-20℃~+80℃,10%RH~95%RH		
	Storage Temperature and Humidity Range	-40℃~+70℃,10%RH~95%RH		
	Service Life(H)	≥100000		
	Mean Time Between Failure(H)	≥10000		

10. Connecting Diagram

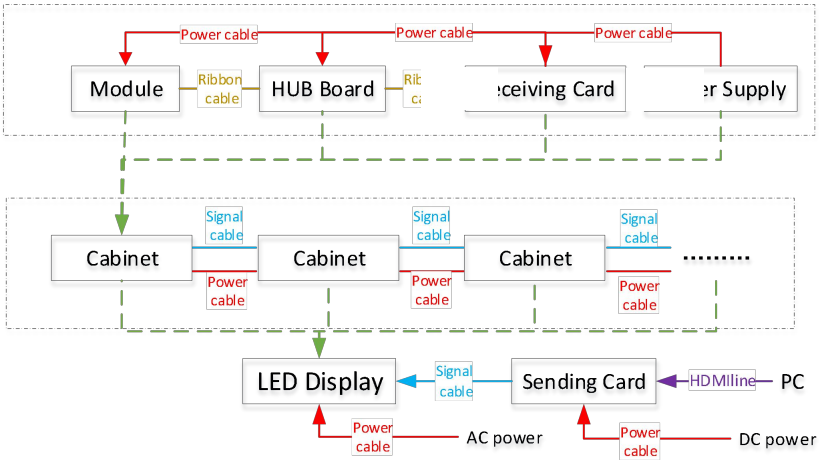

11. Packing and After-sale Service

11.1 Packing

Plywood case/Honeycomb carton/Flight case option



11.2 After-sale Service

If need any help during using display, please for free to contact your salesman.